38AK008,009,012
Air-Cooled Condensing Units
50 Hz

Installation, Start-Up and Service Instructions

CONTENTS

Page

SAFETY CONSIDERATIONS 1
INSTALLATION 1-6
Step 1 — Complete Pre-Installation Checks 1
• UNCRATE UNIT
• INSPECT SHIPMENT
• CONSIDER SYSTEM REQUIREMENTS
Step 2 — Complete Refrigerant Piping Connections 4
• SIZE REFRIGERANT LINES
• FILTER DRIER AND MOISTURE INDICATOR
Step 3 — Make Electrical Connections 5
• FIELD POWER SUPPLY
• FIELD CONTROL WIRING
START-UP 7-8
Preliminary Checks 7
Compressor Rotation 7
Evacuate and Dehydrate 7
Refrigerant Charge. 7
Low-Pressure/Loss-of-Charge Switch (LPS). 7
High-Pressure Switch (HPS). 7
Refrigerant Service Ports 7
Cooling 7
Sequence of Operation. 8
Oil Charge. 8
SERVICE 8-9
Cleaning 8
Lubrication. 8
Condenser-Fan Adjustment 8
Compressor Removal 9
Crankcase Heater 9
TROUBLESHOOTING GUIDE 10
START-UP CHECKLIST 11-12

SAFETY CONSIDERATIONS

Installing and servicing air-conditioning equipment can be hazardous due to system pressure and electrical components. Only trained and qualified service personnel should install or service air-conditioning equipment.

When working on air-conditioning equipment, observe precautions in literature and on tags and labels attached to unit.

Follow all safety codes. Wear safety glasses and work gloves. Use quenching cloth for brazing operations. Have fire extinguisher available. Read these instructions *thoroughly*. Consult local building codes and National Electrical Code(NEC) (U.S.A. Standard) for special installation requirements.

WARNING

Before installing or servicing system, always turn off main power to system and install lockout tag on disconnect. There may be more than one disconnect switch. Electrical shock can cause personal injury.

INSTALLATION

The 38AK008, 009, and 012 units use hermetic compressors. See Table 1A or 1B for physical data.

Step 1 — Complete Pre-Installation Checks

UNCRATE UNIT — Remove unit packaging except for the top, which should be left in place until after unit is rigged into place.

INSPECT SHIPMENT — File claim with shipping company if shipment is damaged.

Table 1A — Physical Data — English

UNIT 38AK	008	009	012
OPERATING WEIGHT (lb)			
Aluminum Coils (Standard)	510	564	564
Copper Coils (Optional)	578	632	632
RIGGING WEIGHT (lb)			
Aluminum Coils (Standard)	560	614	614
Copper Coils (Optional)	628	682	682
REFRIGERANT	R-22		
COMPRESSOR	Copeland , Scroll		
Quantity … Model	1…ZR94KC	1…ZR125KC	2…ZR61KC
Quantity Cylinders	-	-	-
Speed (rpm)	2900	2900	2900
Oil charge (oz)	85	110	66
CONDENSER FAN	Propeller; Direct Drive		
Quantity … RPM	1…900		
Diameter (in.)	26		
Motor Hp (NEMA)	⅓		
Nominal Airflow (cfm)	5400	5400	5400
CONDENSER COIL	Copper Tubes, Aluminum Fins		
Face Area (sq ft)	18.0	18.0	18.0
Storage Capacity (lb)†	16.56	16.56	16.56
CONNECTIONS (sweat)			
Suction (in.)	1 ⅛	1⅛	1 ⅛
Liquid (in.)	½	⅝	½
CONTROLS			
Pressure stat Settings (psig)			
High Cutout	426 ± 7		
Cut-in	320 ± 20		
Low Cutout	27 ± 4		
Cut-in	60 ± 5		

Table 1B — Physical Data — SI

UNIT 38AK	008	009	012
OPERATING WEIGHT (kg)			
Aluminum Coils (Standard)	231	256	256
Copper Coils (Optional)	262	287	287
RIGGING WEIGHT (kg)			
Aluminum Coils (Standard)	254	279	279
Copper Coils (Optional)	285	309	309
REFRIGERANT	R-22		
COMPRESSOR	Copeland, Scroll		
Quantity … Model	1…ZR94KC	1…ZR125KC	2…ZR61KC
Quantity Cylinders	-	-	-
Speed (r/s)	58.2	58.2	58.2
Oil charge (L)	2.50	3.25	1.95
CONDENSER FAN	Propeller; Direct Drive		
Quantity … r/s	1…15.0		
Diameter (mm)	660		
Motor Hp (NEMA)	⅓		
Nominal Airflow (L/s)	2550	2550	2550
CONDENSER COIL	Copper Tubes, Aluminum Fins		
Face Area (sq m)	1.67	1.67	1.67
Storage Capacity (kg)†	7.5	7.5	7.5
CONNECTIONS (sweat)			
Suction (in.)	1 ⅛	1⅛	1 ⅛
Liquid (in.)	½	⅝	½
CONTROLS			
Pressure stat Settings (kPa)			
High Cutout	2937 ± 48		
Cut-in	2206 ± 138		
Low Cutout	186 ± 27		
Cut-in	413 ± 103		

CONSIDER SYSTEM REQUIREMENTS

• Consult local building codes and NEC for special installation requirements.

• Allow sufficient space for airflow clearance, wiring, refrigerant piping, and unit servicing. See Fig. 1.

• Locate unit so that condenser airflow is unrestricted on all sides and above. Refer to Fig. 1.

• Unit may be mounted on a level pad directly on base rails or mounted on raised pads at support points. SeeTable 2 for weight distribution based on recommended support points.

NOTE: If vibration isolators are required for a particular installation, use corner weight information in Table 2 to make proper selection.

Table 2 — Weight Distribution

UNIT 38AK	STD UNIT		CORNER W		CORNER X		CORNER Y		CORNER Z	
	Lb	Kg	Lb	Kg	Lb	Kg	Lb	Kg	Lb	Kg
With Aluminum Coil										
008	392	177	86	39	78	35	99	45	107	49
009,012	426	192	89	40	92	42	109	49	105	48
With Copper Coil										
008	460	208	114	52	95	43	108	49	121	55
009,012	503	215	118	53	116	53	119	54	119	54

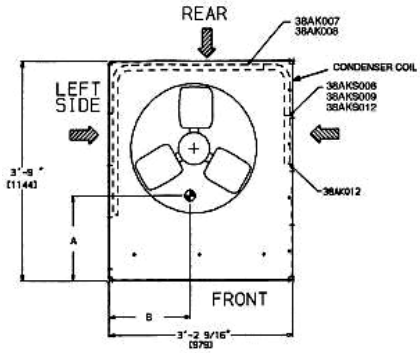

Fig. 1

UNIT 38AK	RIGGING EIGHT*		A		B		C	
	lb	kg	In.	mm	In.	mm	In.	mm
008	560	254	45.0	1143	38.5	978	43.5	1105
009	614	279	45.0	1143	38.5	978	43.5	1105
012	614	279	45.0	1143	38.5	978	43.5	1105

*Weights are for aluminum coils.

Step 2 — Complete Refrigerant Piping Connections— Suction connection is sweat with liquid connection is sweat. Refer to Table 3 for the proper line sizes. Follow standard
Piping practices.

SIZE REFRIGERANT LINES — Consider length of piping Required between condensing unit and air handler, amount of liquid lift, and compressor oil return. See Table 3 and also refer to Part 3 of Carrier System Design Manual for design details and line sizing. Refer to air handler installation instructions for additional information.

Table 3 — Refrigerant Piping Sizes

UNIT 38AK	LINERA LENGTH OF PIPING – FT (M)							
	0-25		25-50		50-75		75-100	
	(0-7.6)		(7.6-15.2)		(15.2-22.9)		(22.9-30.5)	
	L	S	L	S	L	S	L	S
008	½	1⅛	½	1⅛	⅝	1⅜	⅝	1⅜
009	⅝	1⅛	⅝	1⅛	⅝	1⅜	⅝	1⅜
012	½	1⅛	½	1⅛	⅝	1⅜	⅝	1⅜

LEGEND
L — Liquid Line
S — Suction Line

NOTES:
1. Pipe sizes are based on a 2 F (1 C) loss for liquid and suction Lines.
2. Pipe sizes are based on the maximum linear length shown for each column, plus a 50% allowance for fittings.
3. Charge units with R-22 in accordance with unit installation Instructions.
4. Line size conversion to mm is:

in.	mm
½	12.7
⅝	15.9
1⅛	28.6
1⅜	34.9

FILTER DRIER AND MOISTURE INDICATOR — Moisture indicator and filter drier should be installed in liquid line. *Do not use a receiver;* there is none provided with unit and one should not be used.

NOTE: System pressure must be relieved before removing caps. Recover refrigerant prior to brazing.

Pass nitrogen or other inert gas through piping while brazing to prevent formation of copper oxide.

It should be that a liquid line solenoid valve will be positioned in the main liquid line close to the evaporator coil, and wired to close when compressor stops to minimize refrigerant migration during the ‘‘OFF’’ cycle.

Table 4 – Liquid Line Data – 50Hz

UNIT 38AK	MAX ALLOWABLE LIQUID LIFT		LIQUID LINE			
			Max Allowable pressure Drop		Max Allowable Temp Loss	
	Ft	M	psi	kpa	F	C
008	50	15.2	7	48.3	2	1
009	52	15.8	7	48.3	2	1
012	52	17.4	7	48.3	2	1

NOTE: Values shown are for units operating at 45 F (7.2 C) saturated suction and 95 F (35 C) entering air.

Step 3 — Make Electrical Connections

CATION

Unit cabinet must have an uninterrupted, unbroken electrical Ground to minimize the possibility of personal injury if an electrical fault should occur. This ground may consist of electrical wire connected to unit ground lug in control compartment, or conduit approved for electrical ground when installed in accordance with NEC ANSI (American National Standards Institute)/NFPA (National Fire Protection Association) 70 (U.S.A. Standards) and local electrical codes. Failure to follow this warning could result in the installer being liable for personal injury of others.

FIELD POWER SUPPLY — All units except 208/230-v units are factory wired for the voltage shown on the nameplate. If the 208/230-v unit is to be connected to a 208v power supply, the transformer *must* be rewired by moving the black wire from the 230-v 1/4-in. spade terminal on the transformer and connecting it to the 200-v 1/4-in. spade terminal from the transformer.

When installing units, provide a disconnect per NEC. All field wiring must comply with NEC and local requirements. Install field wiring as follows:

1. Install conduit through side panel openings.
2. Install power lines to connections.Wrap connections with electrical tape.

Voltage to compressor terminals during operation must be within voltage range indicated on unit nameplate (also see Table5). Voltages between phases must be balanced within 2% and the current within 10%. Use the formula shown in Table 5,Note 2, to determine the percent voltage imbalance Operation on improper line voltage or excessive phase imbalance constitutes abuse and may cause damage to electrical components.

Table 5 – Electrical Data

UNIT 38AK	NOMINAL VOLTAGE (V-ph-Hz)	VOLTAGE RANGE MIN	VOLTAGE RANGE MAX	COMPRESSOR RLA	COMPRESSOR LRA	OFM FLA	POWER SUPPLY MCA	POWER SUPPLY MOCP
008	220-3-50	198	242	31.5	160	1.4	42.5	50
	400-3-50	360	440	15.7	80	1.4	21.0	25
009	220-3-50	198	242	39.7	198	1.4	52.7	70
	400-3-50	360	440	19.9	99	1.4	26.3	35
012	220-3-50	198	242	39.7	198	1.4	52.7	70
	400-3-50	360	440	19.9	99	1.4	26.3	35

LEGEND

FLA — Full Load Amps
HACR — Heating, Air Conditioning and Refrigeration
LRA — Locked Rotor Amps
MCA — Minimum Circuit Amps
MOCP — Maximum Over current Protection
NEC — National Electrical Code (U.S.A. Standard)
OFM — Outdoor (Condenser) Fan Motor
RLA — Rated Load Amps

NOTES:
1. In compliance with NEC requirements for multicolor and combination load equipment (refer to NEC Articles 430 and 440), the over current protective device for the unit shall be fuse or HACR breaker.
2. **Unbalanced 3-Phase Supply Voltage**
Never operate a motor where a phase imbalance in supply voltage is greater than 2%. Use the following formula to determine the percent of voltage imbalance.

IMPORTABNT: if the supply voltage phase imbalance is more than 2% contact your local electric utility company immediately.

$$= 100 \times \frac{\text{Max voltage deviation from average voltage}}{\text{Average voltage}}$$

Example: Supply voltage is 460-3-60.

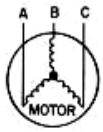

AB = 243v
BC = 236v
AC = 238v

$$\text{Average Voltage} = \frac{425+464+455}{3} = \frac{1371}{3} = 457$$

Determine maximum deviation from average voltage.
(AB) 457 – 452 = 5 v
(BC) 464 – 457 = 7 v
(AC) 457 – 455 = 2 v
Maximum deviation is 7 v.

Determine percent of voltage imbalance.

$$\%\ \text{voltage imbalance} = 100 \times \frac{7}{457} = 1.53\%$$

This amount of phase imbalance is satisfactory as it is below the maximum allowable 2%.

FIELD CONTROL WIRING — Install a accessory thermostat assembly according to installation instructions included with the accessory. Locate thermostat assembly on a solid wall in the conditioned space to sense average temperature in accordance with thermostat installation instructions.

Route thermostat cable or equivalent single leads of colored Wire from sub base terminals to low-voltage connections on Unit as described in Steps 1 through 3 below.

NOTE: For wire runs, use the following insulated wire:

LENGHT Ft	LENGHT M	INSULATION RATING(C)	SIZE AWG	SIZE Sq mm
0-50	**0-15.2**	35	18	0.82
50-75	**15.2-22.9**	35	16	1.30
Over 75	**Over 22.9**	35	14	2.08

LEGEND
AWG — American Wire Gage

All wire larger than no. 18 AWG cannot be directly connected to the thermostat and will require a junction box and splice at the thermostat.
1. Connect thermostat wires to screw terminals of low voltage Connection board.
2. Pass the control wires through the hole provided in the Corner post.
3. Feed wire through the raceway built into the corner post and into the 24 v thermostat connection board. The 24 thermostat connection is located on the left side of the low-voltage connection compartment. The raceway provides the UL required clearance between high- and lowvoltagewiring.

Total combined amperage drain of the field-installed liquid line solenoid valve and indoor (evaporator) fan contactor must not exceed 22 va. If the specified va must be exceeded, use a remote relay to switch the load.

START-UP

Preliminary Checks

1. Field electrical power source must agree with unit nameplate acting.
2. Check that all internal wiring connections are tight and hat all barriers, covers, and panels are in place. Ensure no electrical wires are in contact with refrigerant tubing.
3. Ensure all service valves are open. Be sure all compressor service valves are back seated.
4. Verify compressor crankcase heater is securely in place. Crankcase heater must operate for at least 24 hours before start-up.
5. Check for leaks in refrigerant system by using soap bubbles and/or electronic leak detector.
6. Check that liquid line solenoid valve is located at evaporator coil as shown in Filter Drier and Moisture Indicator section, page 5.
7. Check voltage imbalance as shown in Table 5, Note 2.
8. Check that both outdoor and indoor units are properly mounted in accordance with installation instructions and applicable codes.

Compressor Rotation — On 3-phase units with scroll compressors, it is important to be certain compressor is rotating in the proper direction. To determine whether or not compressor is rotating in the proper direction:

1. Connect service gages to suction and discharge pressure fittings.
2. Energize the compressor.
3. The suction pressure should drop and the discharge pressure should rise, as is normal on any start-up.

If the suction pressure does not drop and the discharge pressure does not rise to normal levels:

1. Note that the condenser fan is probably also rotating in the wrong direction.
2. Turn off power to the unit, tag disconnect.
3. Reverse any two of the unit power leads.
4. Reapply power to the compressor, verify correct pressures. The suction and discharge pressure levels should now move to their normal start-up levels.

Evacuate and Dehydrate — Evacuate and dehydrate entire refrigerant system by use of the methods described in Carrier GTAC II, Module 4, System Dehydration. Evacuate system down to 500 microns and ensure vacuum hold for 15 minutes. If vacuum does not hold, pressurize system and locate leak and repair.

Refrigerant Charge — Refer to Carrier GTAC II, Module 5, Charging Recovery, Recycling, and Reclamation.

Unit panels must be in place when unit is operating during charging procedure.

CHARGE COOLING — Use Cooling Charging Charts, Fig.2. Unit must be charged in cooling mode only. Vary refrigerant until the conditions of the chart are met. Note that charging charts are different from type normally used. Charts are based on charging the units to the correct sub cooling for the various operating conditions. Accurate pressure gage and temperature sensing device are required. Connect the pressure gage to the service port on the liquid line service valve. Mount the temperature sensing device on the liquid line, close to the liquid line service valve and insulate it so that outdoor ambient temperature does not affect the reading. Indoor airflow must be within the normal operating range of the unit. Operate unit a minimum of 15 minutes. Ensure pressure and temperature readings have stabilized. Plot liquid pressure and temperature on chart and add or reduce charge to meet curve. Adjust charge to conform with charging chart, using liquid pressure and temperature to read chart.

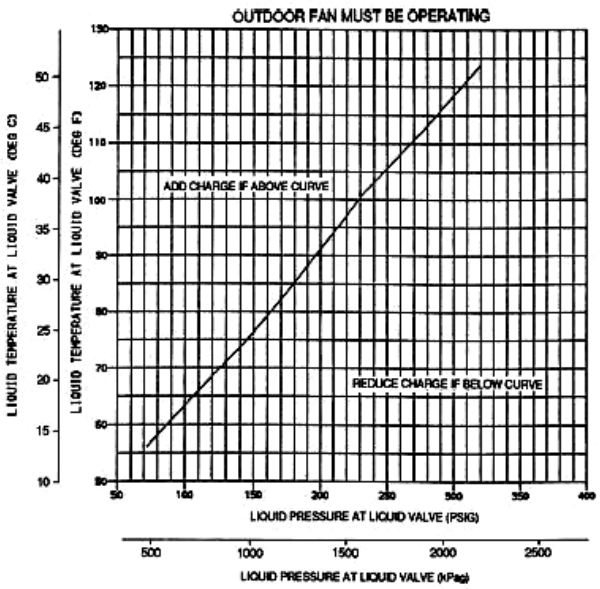

Fig. 2 – Cooling Charging Chart

Low-Pressure/Loss-of-Charge Switch (LPS) — When the liquid line pressure drops below 27 psig (186 kPa), the LPS opens the compressor contactor and stops the compressor. When the pressure reaches 60 psig (414 kPa), the switch resets and the compressor is allowed to restart.

High-Pressure Switch (HPS) — When the refrigerant high-side pressure reaches 426 psig (2937 kPa), the HPS opens to the compressor contactor and stops the compressor. When the pressure drops to 320 psig (2206 kPa), the switch resets and the compressor is allowed to restart.

Refrigerant Service Ports — Each unit system has service ports: one on the suction line, one on the liquid line one on the compressor discharge line. Be sure caps on the ports are tight.

Cooling — Set space thermostat to OFF position. Set system selector switch at COOL position and fan switch at AUTO. Position. Adjust thermostat to a setting below room temperature. Compressor starts on closure of contactor.

Check cooling effects at a setting below room temperature. Check unit charge.

Reset thermostat at a position above room temperature. Compressor will shut off.

TO SHUT OFF UNIT — Set system selector switch at OFF Position. (Resetting thermostat at a position above room

temperature shuts unit off temporarily until space temperature exceeds thermostat setting.) Unit shuts down on any safety trip and remains off. Check reason for safety trip.

Compressor restart is accomplished by manual reset of the thermostat by turning the selector switch to OFF position and then to ON position.

Sequence of Operation — At start-up, the thermostat calls for cooling. With all safety devices satisfied, the compressor contactor and fan contactor energize, causing the compressor and outdoor (condenser) fan motor to operate. Contacts close, allowing the field-supplied and -installed indoor (evaporator) fan contactor to function. The recommended field supplied and installed liquid line solenoid valve will also open, allowing the system to function in cooling. As cooling demand is satisfied, the thermostat contacts break, reenergizing the contactor causing the system to shut off. The liquid line solenoid valve closes, minimizing the potential for refrigerant migration at this time. The compressor does not restart until the thermostat again calls for cooling. Compressor restart is accomplished by manual reset of the thermostat by turning the selector switch to OFF position and then to ON position. This should be done only once. If system shuts down due to the same fault, determine the problem before attempting to reset the Cycle-LOC device.

Oil Charge (Tables 1A and 1B)

38AK UNITS —Allow unit to run for about 20 minutes. Stop unit and check compressor oil level. Add oil only if necessary to bring oil into view in sight glass.

Approved oils are:
Suniso 3GS
WF32-150

38AK UNITS — The 38AK units do not have a sight glass and are factory charged with the correct amount of oil.

ALL UNITS —*Do not reuse drained oil or use any oil that has been exposed to atmosphere.*

If oil is added, run unit for an additional 10 minutes. Stop unit and check oil level. If level is still low, add oil *only after* determining that piping system is designed for proper oil return and that system is not leaking oil.

SERVICE

CAUTION

When servicing unit, shut off all electrical power to the unit to avoid shock hazard or injury from rotating parts.

Cleaning — Inspect unit interior at the beginning of each cooling season and as operating conditions require.

CONDENSER COIL — Inspect coil monthly. Clean condenser coil annually and as required by location or outdoor-air conditions.

Clean coil as follows:

1. Turn off unit power and tag disconnect.
2. Remove and save top panel screws on condensing unit.
3. Remove condenser coil corner post. See Fig. 3. To hold top panel open, place coil corner post between top panel and side panel. See Fig. 4.
4. Remove bracket holding coil sections together at return end of condenser coil. Carefully separate the outer coil section 3 to 4 in. (75 to 100 mm) from the inner coil section. See Fig. 5.
5. Use a water hose or other suitable equipment to flush down between the 2 coil sections to remove dirt and debris. Clean the outer surfaces with a stiff bristled brush in the normal manner.
6. Reposition the coil section and secure.
7. Remove the coil corner post from between the top panel and side panel.
8. Install the coil corner post and replace all screws removed in Step 2.

Lubrication

COMPRESSORS — Each compressor is charged with correct amount of oil at the factory. For additional information on 38AK units, refer to the Oil Charge section above.

FAN MOTOR BEARINGS — Fan motor bearings are of the permanently-lubricated type. No further lubrication is required.

Condenser-Fan Adjustment

1. Shut off unit power supply and tag disconnect.
2. Remove condenser-fan assembly (grille, motor, motor cover, and fan).
3. Loosen fan hub setscrews.
4. Adjust fan height
5. Tighten setscrews.
6. Replace condenser-fan assembly.

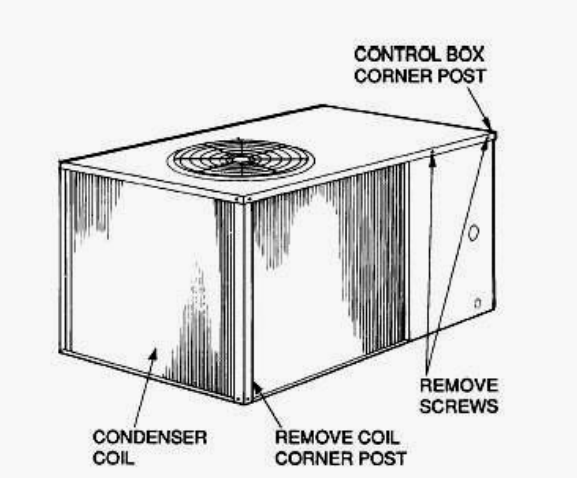

Fig. 3 – Cleaning Condenser Coil

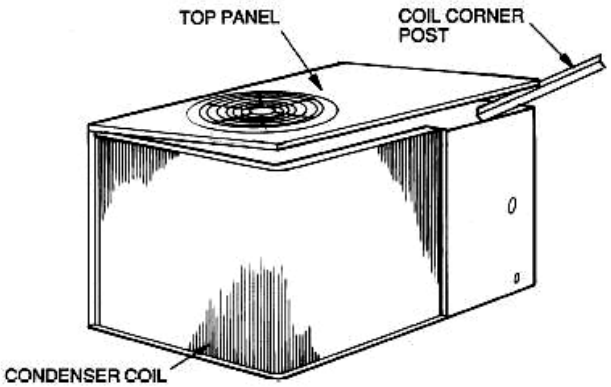

Fig. 4 – Propping Up Top panel

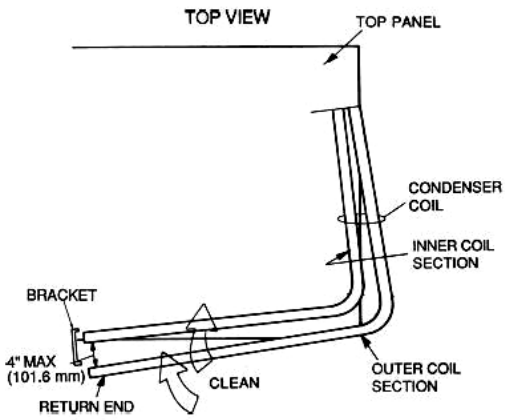

Fig. 5 – September Coil Section

Compressor Removal — See Tables 1A and 1B for compressor information. Follow safety codes and wear safety glasses and work gloves.

1. shut off power to unit and tag disconnect. Remove unit access panel (front of unit).
2. Remove refrigerant from system using refrigerant removal methods described in the Carrier GTAC-II, Module 5, Charging, Recovery, Recycling, and Reclamation.
3. Disconnect compressor wiring at compressor terminal box.
4. Loosen sweat connections (38AK008, and 012 units only).

CAUTION
Excessive movement of copper lines at compressor may cause higher levels of vibration when unit is restored to service.

5. Remove crankcase heater from compressor base
6. Remove compressor hold down bolts.
7. Remove compressor from unit.
8. Clean system. Add new liquid line filter drier.
9. Install new compressor in unit.
10. Connect suction and discharge lines to compressor, as applicable. Ensure that compressor hold down bolts are in place.
11. Connect wiring.
12. Install crankcase heater.
13. Evacuate and recharge unit.
14. Restore unit power.

Crankcase Heater— Close both compressor service valves if applicable when crankcase heater is deenergized for more than 6 hours.

TROUBLESHOOTING GUIDE

SYMPTOM	CAUSE	REMEDY
Compressor does not run contactor open	Power off.	Restore power.
	Fuses blown.	Replace with correct fuses after finding cause and correcting.
	Transformer open/shorted.	Replace transformer if primary winding are receiving power and no output.
	Thermostat circuit open.	Check thermostat setting.
	Low-pressure switch open.	Chech for refrigerant undercharge or system leak.
	High-pressure switch open.	Check for refrigerant overcharge or obstruction of outdoor airflow.
	Connection loose.	Tighten all connections.
	Compressor motor thermostat open.	Check for excessive motor temperature.
Compressor does not run contactor closed	Compressor leads loose, broken.	Check connections with power off.
	Single phasing.	Replace blown fuse.
	Compressor internal overload open.	Allow compressor motor windings to cool down to reset overload. Determine cause for overload opening.
Compressor cycles on high pressure switch condenser fan on	High-pressure switch fault.	Replace switch.
	Airflow restricted. Dirty coil.	Remove obstruction, clean condenser coil.
	Air recirculating.	Clear airflow area.
	Noncondensables in system.	Remover, evacuate and recharge as required. Refer to Carrier TAC-II Module 5, charging, Recovery, Recycling, and Reclamation.
	Refrigerant overcharge.	Recover as required.
	Refrigerant system restrictions.	Check or replace filter drier, expansion valve etc.
Compressor cycles on high pressure switch condenser fan off	Fan slip on shaft.	Tighten fan hub screws.
	Motor not running.	Check power and capacitor 1/3 and ¾ hp motor.
	Motor bearings sized.	Replace motor.
	Motor overload open.	Check overload rating. Check for fan blade obstruction.
	Motor burned out, windings open.	Replace motor.
Compressor cycles on low pressure switch condenser fan off	Filter drier plugged.	Replace filter drier.
	Expansion valve power head detective.	Replace power head.
	Low refrigerant charge.	Find leak, repair, evacuate system, and recharge.
	Expansion valve restricted/plugged.	Remove and replace expansion valve.
Airflow restricted low suction pressure	Evaporator coil iced up.	Check refrigerant charge.
	Evaporator coil dirty.	Clean oil fins.
	Indoor-air filter dirty.	Clean or replace.
	Indoor-air dampers closed.	Check damper operation and position.
Indoor (evaporator) fan stopped low suction pressure.	Electrical connections loose.	Tighten all connections.
	Fan relay defective.	Replace relay.
	Motor overload open.	Check power supply.
	Motor defective.	Replace motor.
	Fan belt broken or slipping.	Replace or tighten belt.
Compressor runs but cooling insufficient - Suction pressure low	Refrigerant charge low.	Add charge.
	Head pressure low.	check refrigerant charge
	Indoor-air filters dirty.	Clean or replace filters.
	Expansion valve power head defective.	Replace power head.
	Expansion valve restricted/plugged.	Remove and replace expansion valve.
	Evaporator coil partly iced.	Check low-pressure setting.
	Evaporator airflow restricted.	Remove obstruction.
Compressor runs but cooling insufficient – Suction pressure high	Head load excessive.	Check for open doors or windows.
	Reverse rotation.	Check compressor rotation

START-UP CHECKLIST

I. Preliminary Information

OUTDOOR: MODEL NO. _____ SERIAL NO. _____

INDOOR: AIR HANDLER MANUFACTURER _____

MODEL NO._____ SERIAL NO. _____

ADDITIONAL ACCESSORIES _____

II. Pre-Start-Up

OUTDOOR UNIT

IS THERE ANY SHIPPING DAMAGE? _____ (Y/N) _____

IF SO, WHERE: _____

_____

WILL THIS DAMAGE PREVENT UNIT START-UP? (Y/N) _____

CHECK POWER SUPPLY. DOES IT AGREE WITH UNIT? (Y/N) _____

HAS THE GROUND WIRE CIRCUIT BEEN CONNECTED PER NEC GUIDELINES? (Y/N) _____

HAS THE CIRCUIT PROTECTION BEEN SIZED AND INSTALLED PROPERLY? (Y/N) _____

ARE THE POWER WIRES TO THE UNIT SIZED AND INSTALLED PROPERLY? (Y/N) _____

38AKS Only: HAVE COMPRESSOR HOLDDOWN BOLTS BEEN LOOSENED (Snubber washers are snug, but not tight)? (Y/N) _____

HAS COMPRESSOR ROTATION BEEN VERIFIED (Is compressor rotating in correct direction?) (Y/N) _____

CONTROLS

ARE THERMOSTAT AND INDOOR-FAN CONTROL WIRING CONNECTIONS MADE AND CHECKED? (Y/N) _____

ARE ALL WIRING TERMINALS (including main power supply) TIGHT? (Y/N) _____

HAS CRANKCASE HEATER BEEN ENERGIZED FOR 24 HOURS? (Y/N) _____

INDOOR UNIT

HAS WATER BEEN PLACED IN DRAIN PAN TO CONFIRM PROPER DRAINAGE? (Y/N) _____

ARE PROPER AIR FILTERS IN PLACE? (Y/N) _____

HAVE FAN AND MOTOR PULLEYS BEEN CHECKED FOR PROPER ALIGNMENT? (Y/N) _____

DO THE FAN BELTS HAVE PROPER TENSION? (Y/N) _____

HAS CORRECT FAN ROTATION BEEN CONFIRMED? (Y/N) _____

PIPING

IS LIQUID LINE SOLENOID VALVE LOCATED AT THE EVAPORATOR COIL AS REQUIRED? (Y/N) _____

HAVE LEAK CHECKS BEEN MADE AT COMPRESSOR, CONDENSER, EVAPORATOR, TXVs (Thermostatic Expansion Valves) SOLENOID VALVES, FILTER DRIERS, AND FUSIBLE PLUGS WITH A LEAK DETECTOR? (Y/N) _____

LOCATE, REPAIR, AND REPORT ANY LEAKS. _____

ON 38AKS UNIT, HAVE ALL COMPRESSOR SERVICE VALVES BEEN FULLY OPENED (BACKSEATED)? (Y/N) _____

HAVE LIQUID LINE SERVICE VALVE AND SUCTION LINE SERVICE VALVE BEEN OPENED? (Y/N) _____

IS THE OIL LEVEL IN THE COMPRESSOR CRANKCASE ON THE 38AKS UNIT IN VIEW IN THE COMPRESSOR SIGHT GLASS? (Y/N) _____

CL-1

Manufacturer reserves the right to discontinue, or change at any time, specifications or designs without notice and without incurring obligations.

CHECK VOLTAGE IMBALANCE

LINE-TO-LINE VOLTS: AB_____ V AC_____ V BC _____V

(AB + AC + BC)/3 = AVERAGE VOLTAGE = _____ V

MAXIMUM DEVIATION FROM AVERAGE VOLTAGE = _____V

VOLTAGE IMBALANCE = 100 X (MAX DEVIATION)/(AVERAGE VOLTAGE) = _____ %

IF OVER 2% VOLTAGE IMBALANCE, DO NOT ATTEMPT TO START SYSTEM!
CALL LOCAL POWER COMPANY FOR ASSISTANCE.

III. Start-Up

CHECK INDOOR (EVAPORATOR) FAN SPEED AND RECORD. _____

CHECK OUTDOOR (CONDENSER) FAN SPEED AND RECORD. _____

AFTER AT LEAST 15 MINUTES RUNNING TIME, RECORD THE FOLLOWING MEASUREMENTS:

OIL PRESSURE (38AKS only) _____

SUCTION PRESSURE _____ Psig (kPa)

SUCTION LINE TEMP _____ °F (°C)

DISCHARGE PRESSURE _____ Psig (kPa)

DISCHARGE LINE TEMP _____ °F (°C)

ENTERING CONDENSER-AIR TEMP _____ DB

LEAVING CONDENSER-AIR TEMP _____ DB

EVAP ENTERING-AIR DB (dry bulb) TEMP _____

EVAP ENTERING-AIR WB (wet bulb) TEMP _____

EVAP LEAVING-AIR DB TEMP _____

EVAP LEAVING-AIR WB TEMP _____

COMPRESSOR AMPS (L1/L2/L3) _____ / _____ /_ _____

HAS REFRIGERANT CHARGE BEEN ADJUSTED PER CHARGING CHARGE? _____

NOTES:

_____

_____

_____

_____

_____

_____

_____

_____

_____

_____

_____

_____

_____

Sanaye Sarma Afarin Iran
شرکت صنایع سرماآفرین ایران
(کریرترموفریک)
NO.200, W. Khorramshahr (Apadana)Ave.,TEHRAN-15337,P.O.BOX: 13145-1799 Tel:88762038 Fax:88762033
سهرودی شمالی، خیابان خرمشهر، شماره ۲۰۰، تهران–۱۵۳۳۷، صندوق پستی :۱۷۹۹– ۱۳۱۴۵ تلفن :۸۸۷۶۲۰۳۸ فاکس:۸۸۷۶۲۰۳۳